STANDARD COMPONENTS PRICE LIST

JDN MONOCRANE

ISSUE: 02/2008

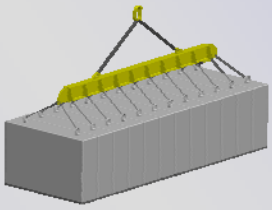

CONTENTS

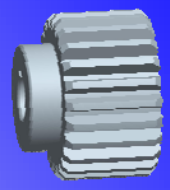

Design & Manufacture	5
Single Flange Wheels	6
Double Flange Wheels	7
Double Flange Direct Drive Wheels	8
Double Flange Portal Wheels	9
Underslung Wheel Kits	10
Motor and Shaft Pinions	11
Rollers and Axles	12
Handwheels and Chain	13
Sheaves	14
Rope Wedge Sockets	15
Single Fall Hook Blocks	16
Two Fall Hook Blocks	17
Two Fall Heavy Duty Hook Blocks	18
Four Fall Hook Blocks	19
Four Fall Heavy Duty Hook Blocks	20
Eight Fall Hook Blocks	21
Eight Fall Heavy Duty Hook Blocks	22
Safety Catches	23
Rope Guides	24
Trolleys	25
Test Weights	26

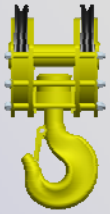

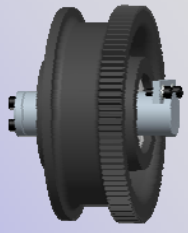

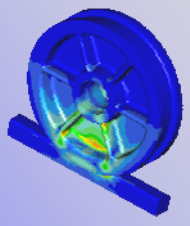

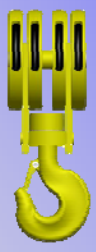

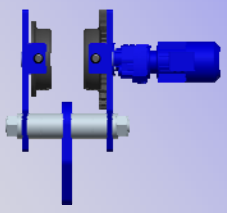

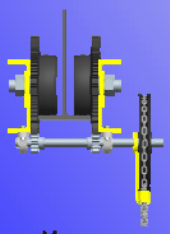

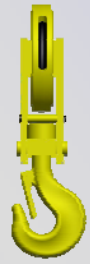

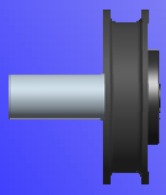

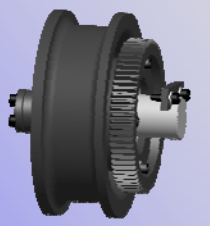

ISSUE 02/2008

JDN MONOCRANE

NOTES

DESIGN & MANUFACTURE

When purchasing **JDN MONOCRANE** components you can have confidence that you are purchasing an Australian engineered, manufactured & quality assured serial product.

Engineering

All **JDN MONOCRANE** components have passed through our two stage in house design process:

1. 3D modelling and calculation in accordance with AS1418.
2. Design verification using Finite Element Analysis (FEA).

Manufacture

All **JDN MONOCRANE** components are manufactured in Australia at our Melbourne workshop.
All casting batches undergo Non-Destructive Testing (NDT).
All machined components and assemblies are verified utilising our in house Quality Assurance Program.

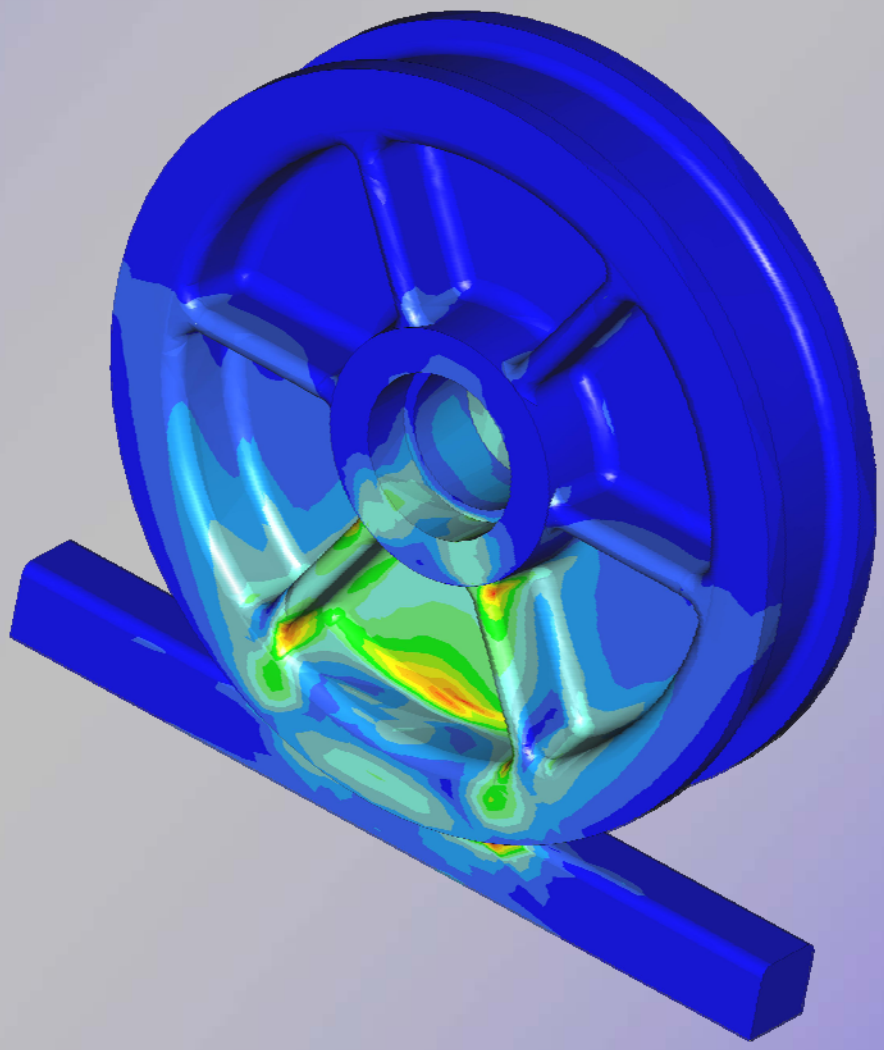

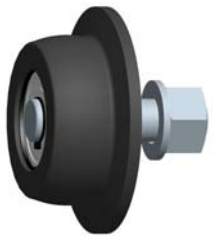

JDN MONOCRANE

SINGLE FLANGE WHEELS

JDN MONOCRANE SW Series wheels are manufactured in Ductile Iron, Grade 500-7(GGG-50), providing a balance between strength, ductility and wear resistance. Featuring shielded ball bearings and machine cut teeth.

Our large range of single flange wheels provide for operation on most types of monorail beams and tracks.

The wheel is available with either a plain flange or integral machine cut ring gear.

Both types feature a spherical tread profile which is compatible with both parallel and tapered beam flanges.

The standard configuration consists of a stationary cantilevered axle with shielded anti-friction bearings mounted inboard in the wheel.

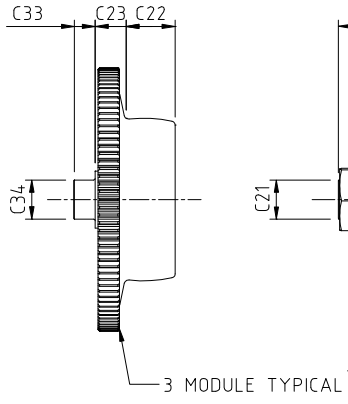

GEARED WHEEL
WELD IN AXLE
(PART No eg SW200G-W)

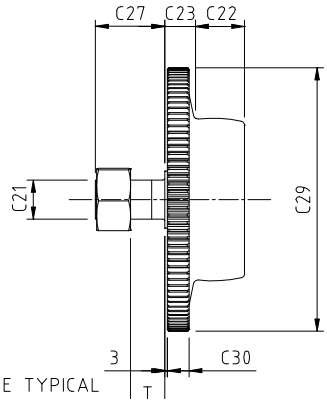

GEARED WHEEL
SCREWED AXLE
(PART No eg SW200G)

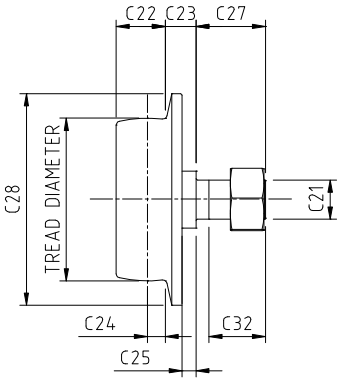

PLAIN WHEEL
SCREWED AXLE
(PART No eg SW200P)

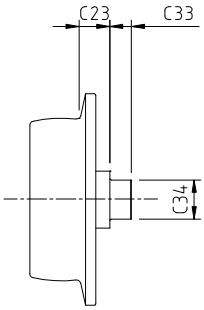

PLAIN WHEEL
WELD IN AXLE
(PART No eg SW200P-W)

PART No.	TREAD DIAM.	C21	C22	C23	C24	C25	T	C27	C28	C29	C30	No of TEETH	C32	C33	C34
SW063	63	16	16	14	6	2.5	16	33	89	-	-	-	25	6	16
SW075	75	20	18	20	7	8.5	20	40	105	126	12	40	35	12	20
SW090	90	24	22	21	8	4	20	45	125	150	13	48	35	14	25
SW105	105	30	23	23	12	4.4	25	54	140	174	15	56	44	20	30
SW120	120	30	38	25	13	11	25	54	160	198	16	64	44	20	30
SW150	150	36	47	30	16	15	35	70	200	246	20	80	50	25	40
SW200	200	48	56	36	20	16	40	80	260	324	25	106	65	25	50
SW250	250	48	65	39	28	17	45	85	320	408	28	134	65	25	55
SW300	300	64	68	42	28	20	45	95	370	489	31	161	70	30	70

* All dimensions in mm and subject to change without notice.

NOTE: Screwed Axle for SW250 wheels only

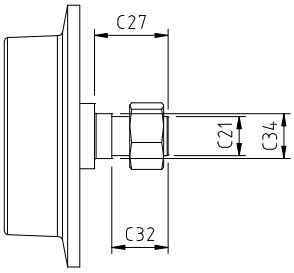

WHEEL No	WHEEL LOADING PER 4 WHEELS (kg)		
	M3/M4	M5/M6	M7/M8
SW063	630	500	400
SW075	1250	1000	800
SW090	2500	2000	1600
SW105	5000	4000	3200
SW120	8000	6300	5000
SW150	12500	10000	8000
SW200	20000	16000	12500
SW250	25000	20000	16000
SW300	32000	25000	20000

JDN MONOCRANE

DOUBLE FLANGE WHEELS

JDN MONOCRANE DW Series wheels are manufactured in Ductile Iron, Grade 500-7 (GGG-50), providing a balance between strength, ductility and wear resistance. Featuring shielded bearings and machine cut teeth.

Our large range of double flange wheels provide for operation on most types of rail and square bar.

The wheel is available with either a plain flange or integral machine cut ring gear.

As standard the wheel is fitted with anti-friction bearings mounted inboard in the wheel

Axle is retained by a lock plate and is reversible in the wheel

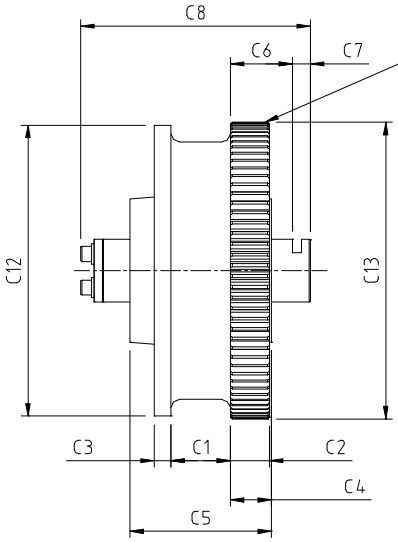

GEARED WHEEL
(PART No. eg. DW305G)

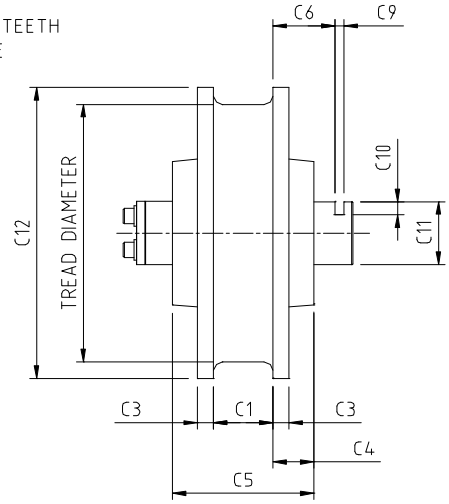

PLAIN WHEEL
(PART No. eg. DW305P)

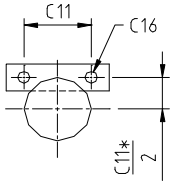

* = 26 FOR DW 150

LOCK PLATE

PART NUMBER	TREAD DIAM.	TREAD WIDTH C1		C2	C3	C4	C5	C6	C7	C8	C9	C10	C11	C12	C13	C14	C15	C16
DW150	150	66	-	24	11.5	29.5	125	50	18	213	10	10	40	185	192	62	3	M8
DW200	200	66	76	29.0	12.5	34.5	135	56	20	230	10	16	60	235	243	79	3	M10
DW250	250	66	76	32.5	12.5	34.5	135	56	20	230	10	16	60	290	297	97	3	M10
DW305	305	66	76	43.5	18.5	46	158	69	20	256	10	16	75	345	352	86	4	M12
DW380	380	66	76	42.0	18.5	46	157	78.5	30	292.5	16	20	95	430	445	87	5	M16
DW500	500	76	90	44	22	44	164	82	30	305	16	20	95	550	560	110	5	M16
DW630	630	80	100	52.5	22.5	52.5	185	88	30	328	16	20	100	690	695	137	5	M16
DW800	800	130	100	60	30	60	220	99	34	378	16	20	120	870	870	143	6	M20

* All dimensions in mm and subject to change without notice.

PART NUMBER	WHEEL LOADING/DUTY PER WHEEL (kg)		
	M3/M4	M5/M6	M7/M8
DW 150	2500	2000	1600
DW 200	6300	5000	4000
DW 250	10000	8000	6300
DW 305	16000	12500	10000
DW 380	20000	16000	12500
DW 500	32000	25000	20000
DW 630	40000	32000	25000
DW800	63000	50000	40000

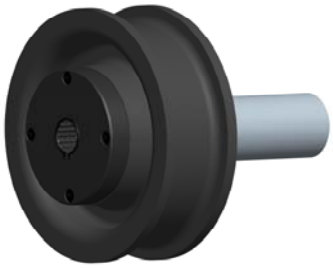

JDN MONOCRANE

DOUBLE FLANGE

DIRECT DRIVE WHEELS

JDN MONOCRANE Double flange ductile iron wheel and precision machined shaft / drive assembly ensure smooth and direct power transfer.

Our large range of double flange wheels provide for operation on most types of rail and square bar.

The standard configuration consists of a stationary cantilevered axle with shielded anti friction bearings mounted inboard in the wheel.

Contact our office for technical assistance regarding drive motor selection for your specific application.

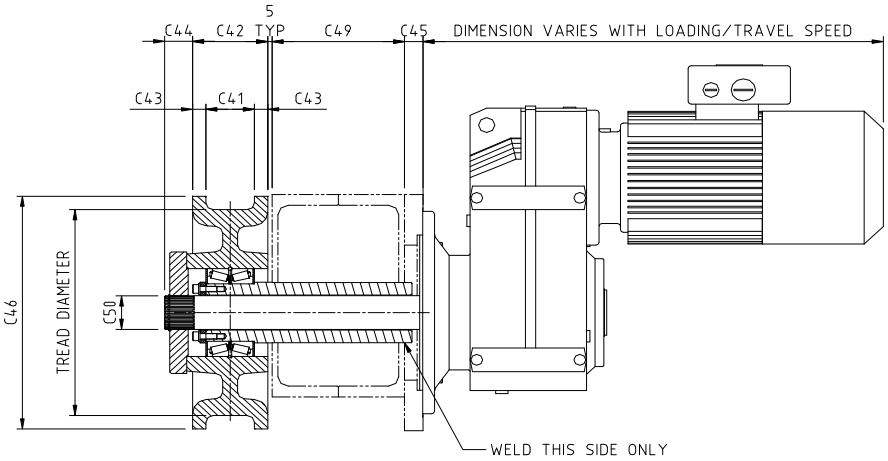

DRIVE WHEEL ASSEMBLY
(PART No. eg. DWD305D6)

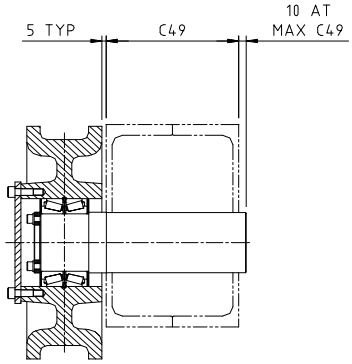

IDLER WHEEL ASSEMBLY
(PART No. eg. DWD305I6)

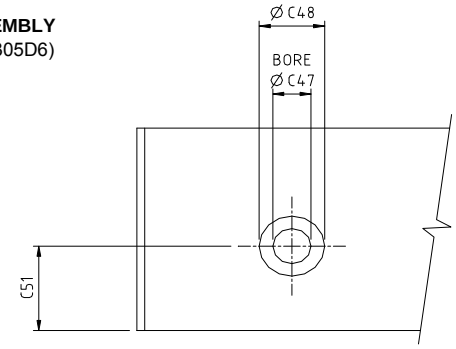

BOGIE BORING DETAIL

TREAD DIAMETER	TREAD WIDTH C41		C42		C43	C44	C45	C46	C47	C48	MAX C49	C50	C51
DWD160	50	66	70	86	10	19.5	30	190	32	59	150	30	60
DWD200	66	76	91	104	12.5	24.5	38	235	37	64	150	35	80
DWD250	66	76	91	104	12.5	25	38	290	42	74	180	40	105
DWD305	66	76	110	111	18.5	33	38	345	52	89	180	50	133
DWD380	66	76	103	110	18.5	39	38	430	62	99	200	60	170

* All dimensions in mm and subject to change without notice.

WHEEL No.	WHEEL LOADING/DUTY PER WHEEL (kg)		
	M3/M4	M5/M6	M7/M8
DWD 160	4000	3200	2500
DWD 200	6300	5000	4000
DWD 250	10000	8000	6300
DWD 305	16000	12500	10000
DWD 380	20000	16000	12500

JDN MONOCRANE

DOUBLE FLANGE PORTAL WHEELS

JDN MONOCRANE DWP Series wheels are manufactured in Ductile Iron, Grade 500-7 (GGG-50), providing a balance between strength, ductility and wear resistance. Featuring shielded bearings and machine cut teeth.

DWP wheels are specifically designed to suit applications where it is preferable for the ring gear to be raised to prevent contamination or fouling on structure. Typical applications include portal cranes and low profile rail applications.

As standard the wheel is fitted with anti-friction bearings mounted inboard in the wheel

Axle is retained by a lock plate.

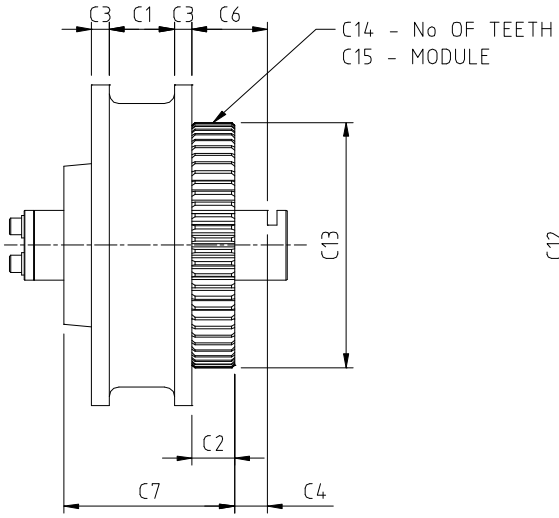

GEARED WHEEL
(PART No. eg. DWP305G)

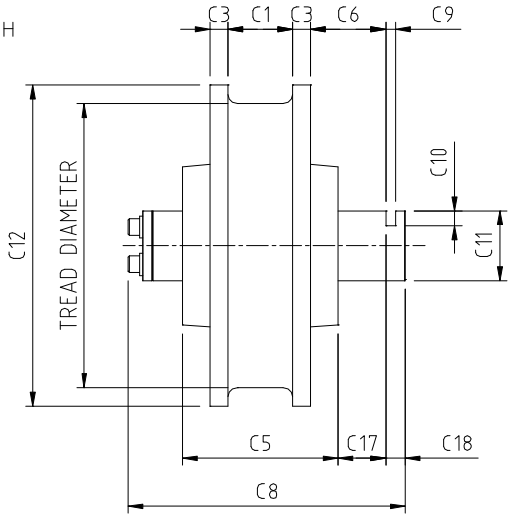

PLAIN WHEEL
(PART No. eg. DWP305P)

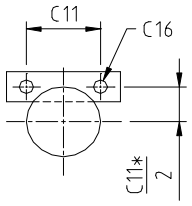

* = 26 FOR DWP 150

LOCK PLATE

PART NUMBER	TREAD DIAM.	TREAD WIDTH C1		C2	C3	C4	C5	C6	C7	C8	C9	C10	C11	C12	C13	C14	C15	C16	C17	C18
DWP150	150	66	-	28	11.5	19.5	125	47.5	135	222	10	10	40	185	153	49	3	M8	29.5	18
DWP200	200	66	76	35	12.5	21.5	135	56.5	148	242	10	16	60	235	189	61	3	M10	34.5	20
DWP250	250	66	76	35.5	12.5	26.5	135	62	148	247	10	16	60	290	219	71	3	M10	39.5	20
DWP305	305	66	76	43	18.5	33	158	76	173	281	10	16	75	345	264	64	4	M12	48	20
DWP380	380	66	76	43	18.5	34.5	157	77.5	173	309	16	20	95	430	340	66	5	M16	49.5	30
DWP500	500	76	90	45	22	38.5	164	83.5	187	329	16	20	95	550	460	90	5	M16	61.5	30
DWP630	630	80	100	48	22.5	40.5	185	88.5	203	351	16	20	100	690	610	120	5	M16	58.5	30
DWP800	800	130	100	48	30	40.5	220	88.5	248	397	16	20	120	870	792	130	6	M20	58.5	34

* All dimensions in mm and subject to change without notice.

PART NUMBER	WHEEL LOADING/DUTY PER WHEEL (kg)		
	M3/M4	M5/M6	M7/M8
DWP150	2500	2000	1600
DWP200	6300	5000	4000
DWP250	10000	8000	6300
DWP305	16000	12500	10000
DWP380	20000	16000	12500
DWP500	32000	25000	20000
DWP630	40000	32000	25000
DWP800	63000	50000	40000

JDN MONOCRANE

UNDERSLUNG WHEEL KIT

JDN MONOCRANE wheel kits provide the basic travel components for the fabricator to manufacture their own crane travel units.

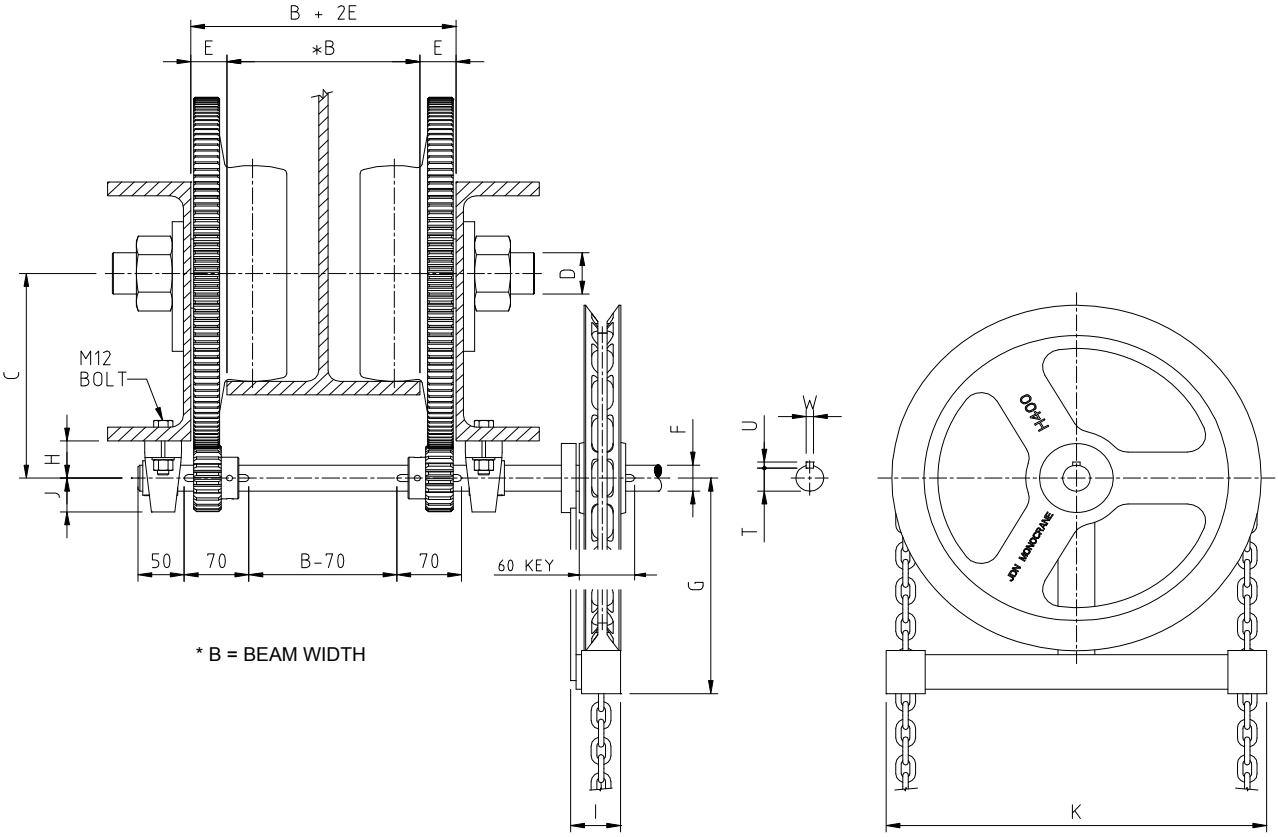

* B = BEAM WIDTH

WHEEL KIT INCLUDES:

4 - Plain wheels
4 - Geared wheels
4 - 24 Tooth pinions
4 - Bearing units
1 - Handwheel complete with handchain for 5 metre drop
1 - 300mm Key steel
1 - Handchain Guide

PART NUMBER	TREAD DIAM.	CAPACITY ON FOUR WHEELS (kg)			HAND WHEEL DIAM.	AXLE D	GEAR MESH C	E	SHAFT AND KEYWAY				G	H	I	J	K
		M3/M4	M5/M6	M7/M8					F	T	U	W					
USWK063	63	630	500	400	-	16	-	12	30	26	7	8	-	42.9	-	40.1	-
USWK075	75	1250	1000	800	H200B	20	96	19	30	26	7	8	150	42.9	54.2	40.1	213
USWK090	90	2500	2000	1600	H200B	24	108	20	30	26	7	8	150	42.9	54.2	40.1	213
USWK105	105	5000	4000	3200	H300B	30	120	22	30	26	7	8	200	42.9	54.2	40.1	308
USWK120	120	8000	6300	5000	H300B	30	132	24	30	26	7	8	200	42.9	54.2	40.1	308
USWK150	150	12500	10000	8000	H400B	36	156	29	30	26	7	8	250	42.9	54.2	40.1	413
USWK200	200	20000	16000	12500	H400B	48	195	35	40	35	8	12	250	49.2	54.2	50.8	413
USWK250	250	25000	20000	16000	H400B	48	237	39	40	35	8	12	250	49.2	54.2	50.8	413
USWK300	300	32000	25000	20000	H400B	64	277.5	42	40	35	8	12	250	49.2	54.2	50.8	413

* All dimensions in mm and subject to change without notice.

JDN MONOCRANE

MOTOR AND SHAFT PINIONS

JDN MONOCRANE Motor and Shaft Pinions are machine cut from K1045, providing both strength and durability with the option of flame hardening.

Alternative materials available upon request as well as special sizes.

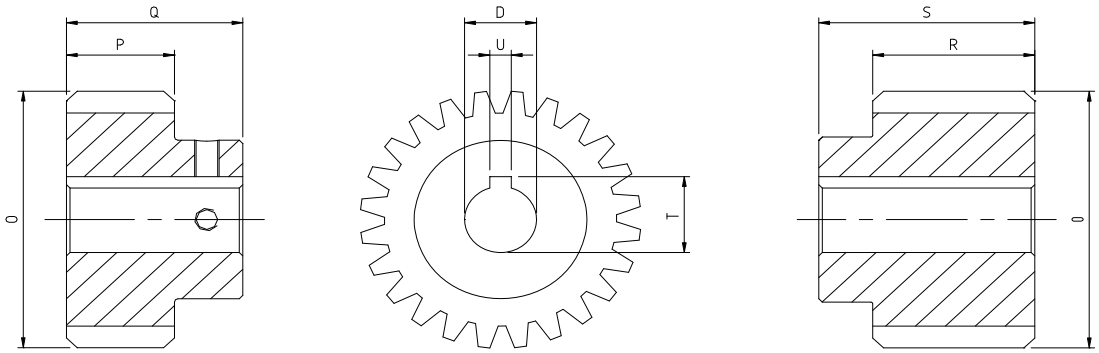

SHAFT PINION **MOTOR PINION**

PART No. DESIGNATION	***P***	***2***	***24***	***20***	***M or S***
	Pinion	Module	No of Teeth	Shaft Size	Motor or Shaft

PART No	MODULE	No of TEETH	D	O	P	Q	R	S		U
P22420M	2	24	20	52	-	-	45	60	22.8	6
P22425M	2	24	25	52	-	-	45	60	28.3	8
P22425S	2	24	25	52	18	28	-	-	28.3	8
P31920M	3	19	20	63	-	-	45	60	22.8	6
P31925M	3	19	25	63	-	-	45	60	28.3	8
P31930M	3	19	30	63	-	-	45	60	33.3	8
P31930S	3	19	30	63	30	49	-	-	33.3	8
P31935M	3	19	35	63	-	-	45	60	39	10
P32420M	3	24	20	78	-	-	45	60	22.8	6
P32420S	3	24	20	78	30	49	-	-	23	6
P32425M	3	24	25	78	-	-	45	60	28.3	8
P32425S	3	24	25	78	30	49	-	-	29	8
P32430M	3	24	30	78	-	-	45	60	33.3	8
P32430S	3	24	30	78	30	49	-	-	33.3	8
P32435M	3	24	35	78	-	-	45	60	39	10
P32435S	3	24	35	78	30	49	-	-	39	10
P32440M	3	24	40	78	-	-	45	60	43.3	12
P32440S	3	24	40	78	30	49	-	-	44	12
P33020M	3	30	20	96	-	-	45	60	22.8	6
P33020S	3	30	20	96	30	49	-	-	23	6
P33025M	3	30	25	96	-	-	45	60	28.3	8
P33030M	3	30	30	96	-	-	45	60	33.3	8
P33030S	3	30	30	96	30	49	-	-	33.3	8
P33040M	3	30	40	96	-	-	45	60	43.3	12
P33040S	3	30	40	96	30	49	-	-	44	12
P41925M	4	19	25	84	-	-	55	75	28.3	8
P41930M	4	19	30	84	-	-	55	75	33.3	8
P41930S	4	19	30	84	55	70	-	-	33.3	8
P41935M	4	19	35	84	-	-	55	75	39	10
P41940M	4	19	40	84	-	-	65	85	43.3	12
P41940S	4	19	40	84	55	70	-	-	43.3	12
P42430M	4	24	30	104	-	-	55	75	33.3	8
P42435S	4	24	35	104	55	70	-	-	39	10
P42440M	4	24	40	104	-	-	65	85	43.3	12
P42440S	4	24	40	104	55	70	-	-	43.3	12
P42450M	4	24	50	104	-	-	65	85	54	14
P51925M	5	19	25	105	-	-	65	85	28.3	8
P51930M	5	19	30	105	-	-	65	85	33.3	8
P51935M	5	19	35	105	-	-	65	85	39	10
P51940M	5	19	40	105	-	-	65	85	43.3	12
P51950M	5	19	50	105	-	-	65	85	53.8	14
P51950S	5	19	50	105	60	80	-	-	53.8	14
P52430M	5	24	30	130	-	-	65	85	33.3	8
P52440M	5	24	40	130	-	-	65	85	43.3	12
P52440S	5	24	40	130	60	80	-	-	44	12
P52450S	5	24	50	130	60	80	-	-	53.8	14
P62450S	6	24	50	156	70	100	-	-	54	14
P62460M	6	24	60	156	-	-	85	115	65	18
P62470M	6	24	70	156	-	-	110	140	75	20

* All dimensions in mm and subject to change without notice.

JDN MONOCRANE

ROLLERS AND AXLES

JDN MONOCRANE rollers and axles are machined from K1045 to provide durability as well as good wear characteristics.

Rollers are fitted standard with shielded deep groove ball bearings and can be flame hardened if required.

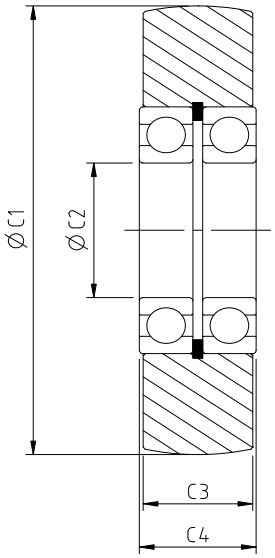

RRC

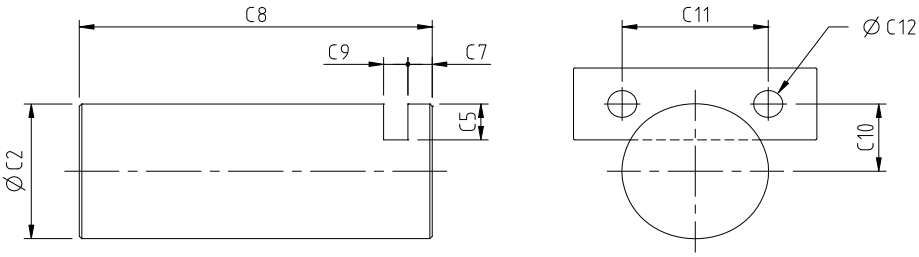

RA

ROLLER PART No	C1	C2	C3	C4	AXLE PART No	C5	C7	C8	C9	KEEPER PLATE PART No	C10	C11	C12
JO90RRC	90	30	26	34	JO90RA	10	10	90	10	AXLPDW150	21	40	M8
J120RRC	120	40	30	38.5	J120RA	10	10	90	10		26	40	M8
J150RRC	150	40	30	38.5	J150RA	10	10	130	10		26	40	M8
J180RRC	180	50	34	43	J180RA	16	10	130	10	AXLPDW200	25	60	M12
J200RRC	200	60	45	48	J200RA	16	10	145	10		30	60	M12

* All dimensions in mm and subject to change without notice.

WHEEL CAPACITIES PER WHEEL kgs			
PART No	M3/M4	M5/M6	M7/M8
JO90RRC	2000	1600	1250
J120RRC	4000	3200	2000
J150RRC	6300	5000	4000
J180RRC	8000	6300	5000
J200RRC	10000	8000	6300

JDN MONOCRANE

HANDWHEELS AND CHAIN

JDN MONOCRANE handwheels are manufactured in grey iron grade T200 (GG20), with cast pockets to suit our standard handchain. Boring and keying optional.

JDN MONOCRANE also stock handchain to suit our standard handwheels. The handchain is available in either a plain or galvanised finish.

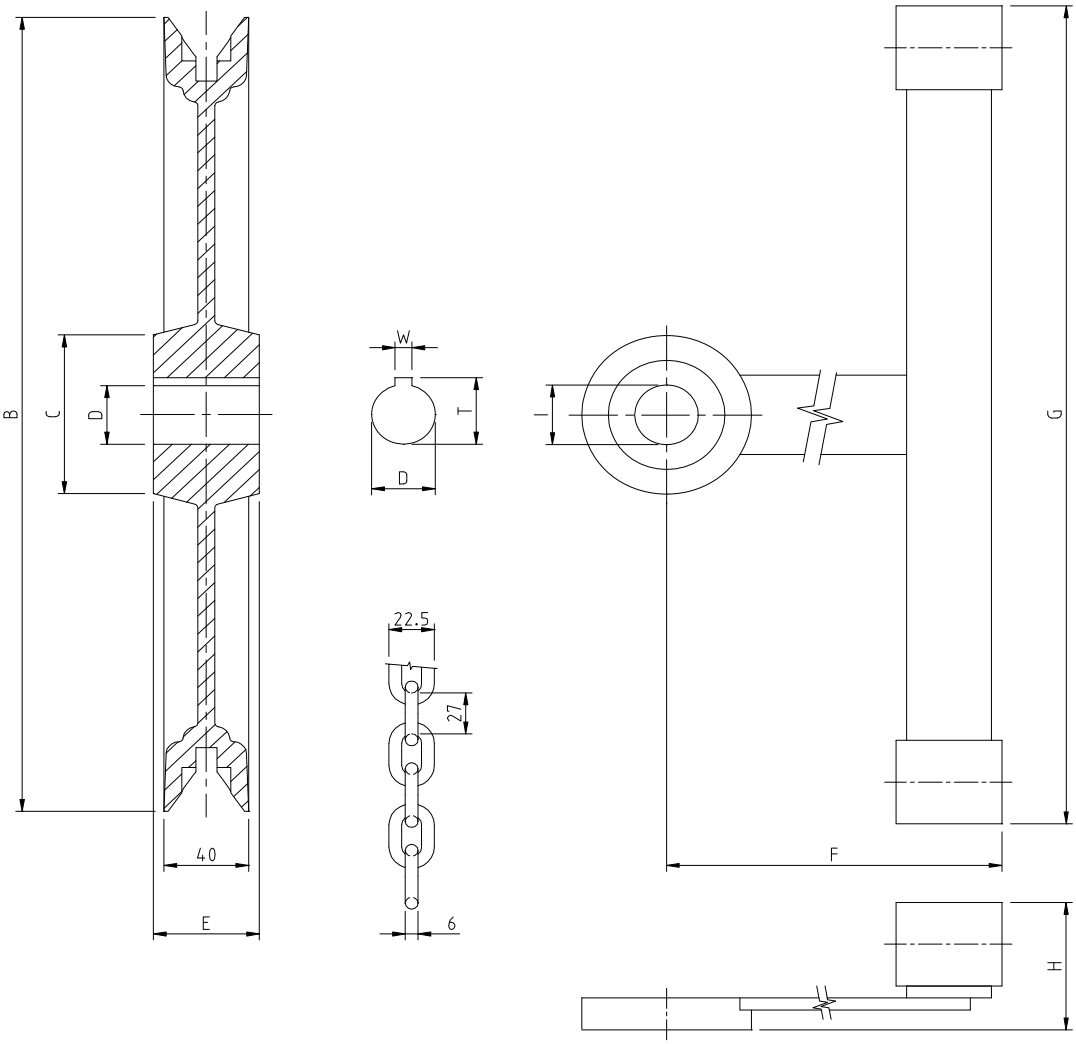

PART No.	B	C	MAX D	E	T	W
H165	165	50		40		
H165B	165	50	30	40	33.3	8
H200	200	50		40		
H200B	200	50	30	40	33.3	8
H300	300	80		50		
H300B-30	300	80	30	50	33.3	8
H300B-40	300	80	40	50	43.3	12
H400	400	80		50		
H400B-30	400	80	30	50	33.3	8
H400B-40	400	80	40	50	43.3	12
H400B-50	400	80	50	50	53.8	14

PART No.	F	G	MAX H	I
HCG-H165B	135	178	64.2	30
HCG-H200B	150	213	64.2	30
HCG-H300B	200	308	64.2	30 40
HCG-H400B	250	413	64.2	30 40 50

* All dimensions in mm and subject to change without notice.

JDN MONOCRANE

SHEAVES

JDN MONOCRANE S series sheaves are manufactured in Ductile iron, Grade 500-7 (GGG-50), providing a balance between strength, ductility and wear resistance.

NOTE: 110 & 160 dia Sheaves are made from mild steel

JDN MONOCRANE have the expertise to design and manufacture sheaves to suit your specific application.

Please contact our office for technical advice.

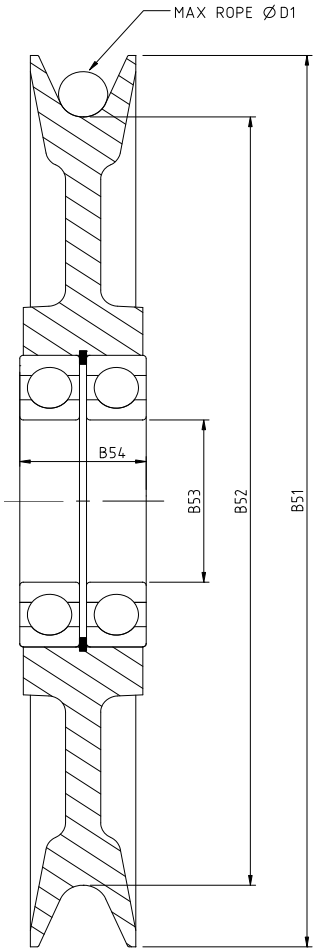

Part No	B51	B52	B53	B54	D1 (max)	MRC
S110D-6005	110	95	25	25.7	5	1000
S160D-6006	160	135	30	28	8	2500
S210D-6008	210	180	40	32.5	11	4000
S260D-6210	260	222	50	43	13	6300
S330D-6212	330	280	60	48	16	10000
S435D-6215	435	380	75	54	18	16000
S435D-6218	435	380	90	64	22	25000
S550D-6220	550	474	100	72	26	32000
S650D-6222	650	565	110	80	30	40000
S750D-6226	750	650	130	85	36	50000

Ductile Iron sheave, shielded ball bearings with machined groove and bore.

* All dimensions in mm and subject to change without notice.

JDN MONOCRANE

WEDGE ROPE SOCKETS

JDN MONOCRANE Rope Wedge Socket range is manufactured from Grade AS2074 Cast Steel C4-1(245MPa Y) providing a balance between strength and wear resistance.

Manufactured to exacting tolerances to ensure maximum rope grip, while still enabling ease of installation and removal of even the largest wire ropes in the series.

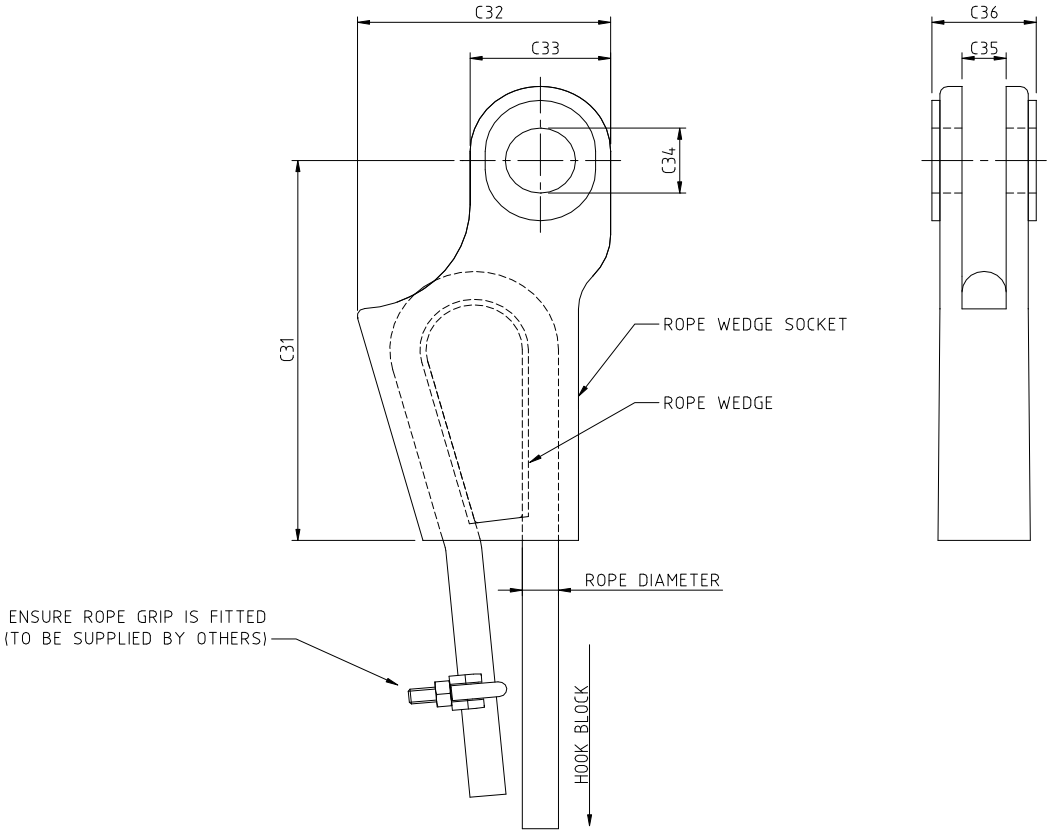

PART No	ROPE DIAMETER	C31	C32	C33	C34	C35	C36	MRC kg
HF10052450	5 - 6	95	53	36	14	11	25	1250
HF20072450	7	95	53	36	14	11	25	1250
HF30092450	8 - 9	132	73	40	18	12	30	2000
HF40112450	10 - 12	146	89	48	18	15	29	3200
HF50142450	14 - 15	174	117	60	25	18	37	5000
HF60162450	16	184	120	60	25	22	41	5000
HF70182450	17 - 20	170	137	69	30	23	46	8000
HF80222250	21 - 24	258	173	95	45	28	58	12500
HF90262450	26	320	220	120	60	32	84	16000
HF100302450	30	320	220	120	60	32	84	20000
HF110362450	36	410	253	140	70	44	104	25000

* All dimensions in mm and subject to change without notice.

JDN MONOCRANE

SINGLE FALL HOOK BLOCK

JDN MONOCRANE single fall hook block range features a slewing hook to DIN/ISO Standards. All hooks are fitted with a spring loaded safety catch as standard.

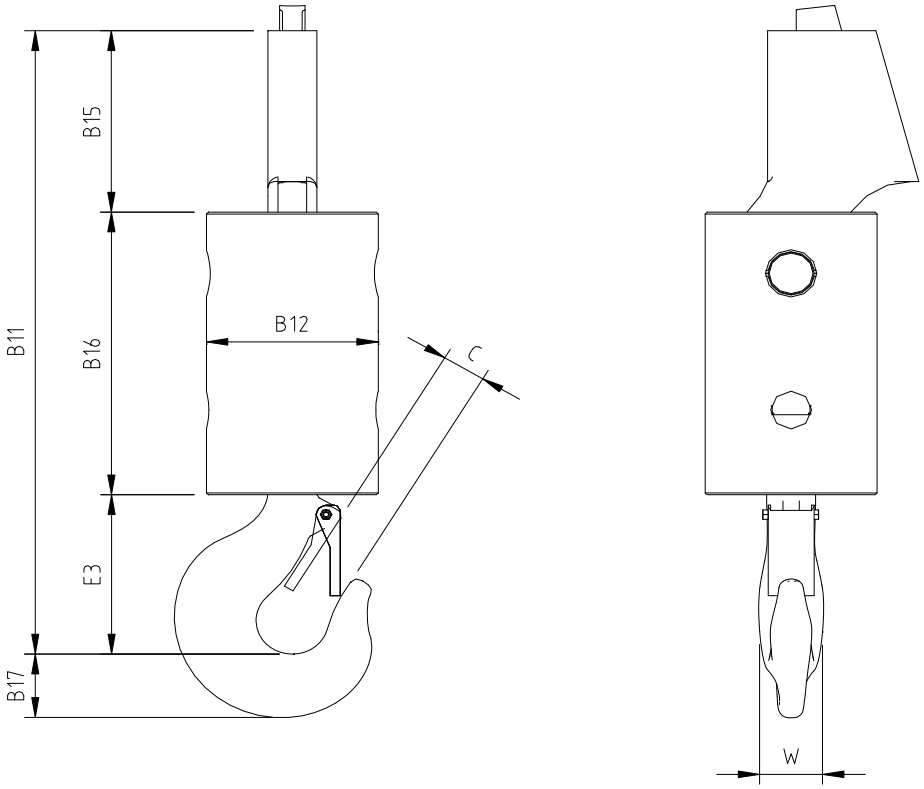

PART No	MRC kgs	B11	B12	B15	B16	B17	C	E3	W	MAX ROPE
HB10052100X	500	365	114	65	170	41	32	130	32	5
HB20072100X	1250	366	114	65	170	41	32	131	32	8
HB30092100X	2000	393	114	92	170	41	32	131	32	11
HB40112100X	3200	463	141	121	200	56	35	142	38	13
HB50142100X	4000	486	141	144	200	56	35	142	38	14
HB60162100X	5000	496	141	154	200	56	35	142	38	16
HB70182100X	8000	504	168	130	220	59	40	154	45	18
HB80222100X	12500	661	168	193	300	68	45	169	53	22
HB90262100X	16000	773	219	240	350	76	52	183	60	26
HB100302100X	20000	773	219	240	350	76	52	183	60	30
HB110362100X	25000	943	273	310	400	96	66	233	75	36

* All dimensions in mm and subject to change without notice.

JDN MONOCRANE

TWO FALL HOOK BLOCK

JDN MONOCRANE two fall hook block range features a pivoting trunnion and slewing hook to DIN/ISO Standards, as well as **JDN MONOCRANE** "S" series sheaves with shielded ball bearings to provide optimum performance and wear characteristics. All hooks are fitted with a spring loaded safety catch as standard.

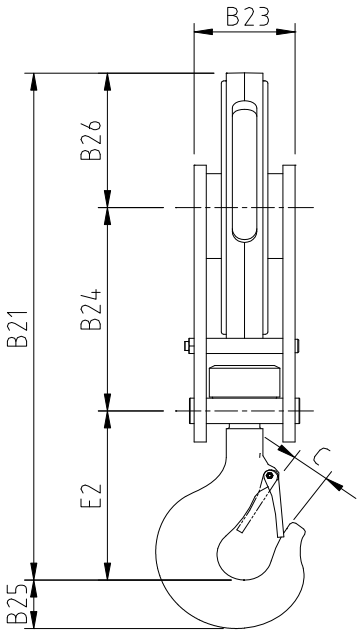

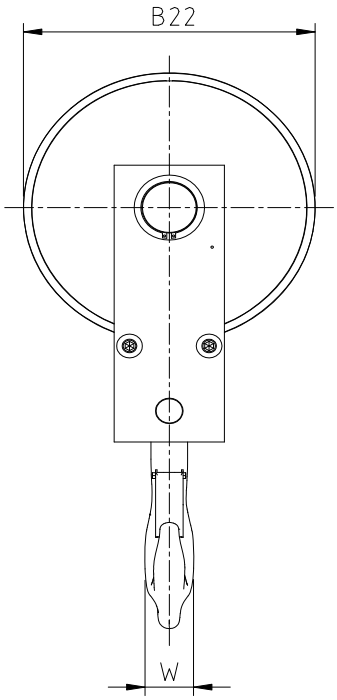

PART No	MRC kgs	B21	B22	B23	B24	B25	B26	C	E2	W	MAX ROPE
HB10052200X	1000	360	140	71	133	41	70	32	158	32	5
HB20072200X	2500	418	194	71	163	41	97	32	158	32	8
HB30092200X	4000	494	244	87	200	56	122	35	172	38	11
HB40112200X	6300	541	298	91	220	56	149	35	172	38	13
HB50142200X	10000	645	370	105	270	59	185	40	190	45	16
HB70182200X	16000	782	476	135	330	68	238	45	214	53	18
HB80222200X	25000	898	476	165	360	86	238	60	300	67	22

* All dimensions in mm and subject to change without notice.

JDN MONOCRANE

TWO FALL HEAVY DUTY

HOOK BLOCK

JDN MONOCRANE two fall hook block range features a pivoting trunnion and slewing hook to DIN/ISO Standards, as well as **JDN MONOCRANE** "S" series sheaves with shielded ball bearings to provide optimum performance and wear characteristics. All hooks are fitted with a spring loaded safety catch as standard.

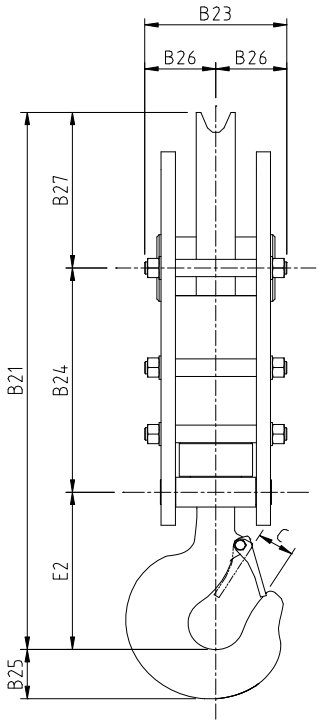

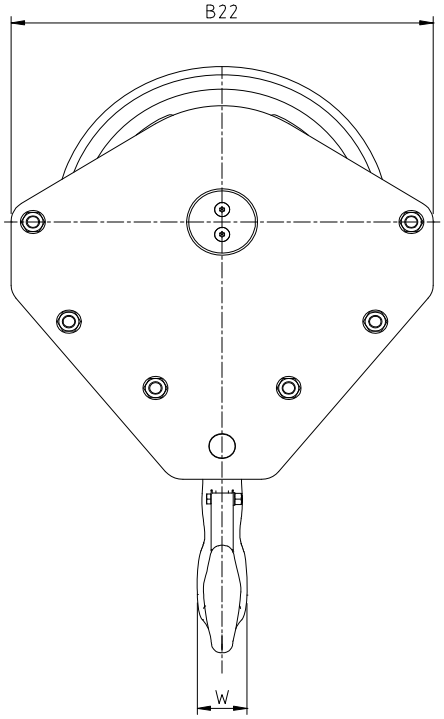

PART No	MRC kgs	B21	B22	B23	B24	B25	B26	B27	C	E2	W	MAX ROPE
HB90262200X	32000	993	710	260	400	96	130	275	66	318	75	26
HB100302200X	40000	1195	880	320	490	119	160	325	83	380	95	30
HB110362200X	50000	1295	950	320	540	119	160	375	83	380	95	36

* All dimensions in mm and subject to change without notice.

JDN MONOCRANE

FOUR FALL HOOK BLOCK

JDN MONOCRANE four fall hook block range features a pivoting trunnion and slewing hook to DIN/ISO Standards, as well as **JDN MONOCRANE** "S" series sheaves with shielded ball bearings to provide optimum performance and wear characteristics. All hooks are fitted with a spring loaded safety catch as standard.

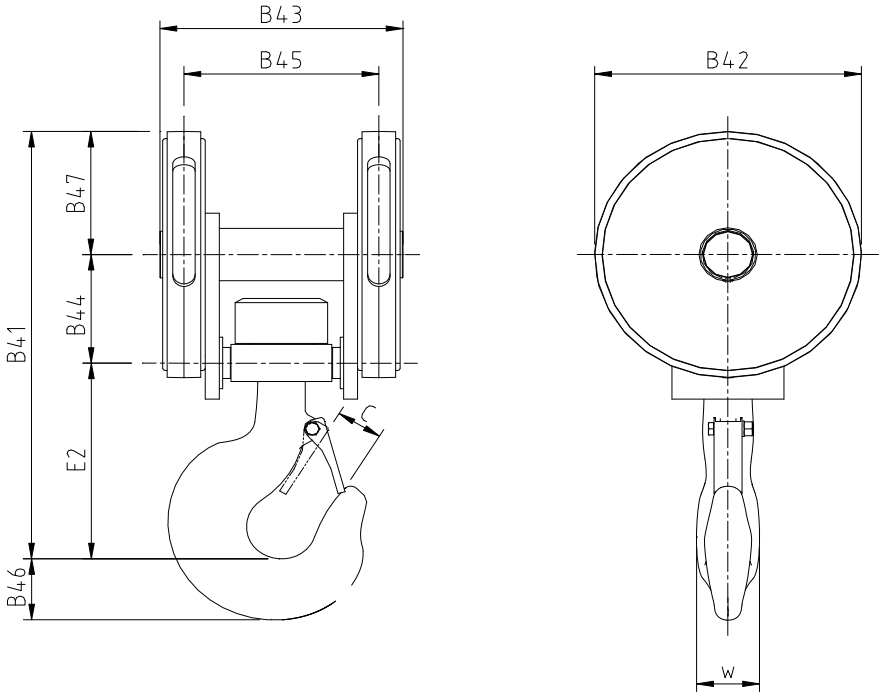

PART No	MRC kg	B41	B42	B43	B44	B45	B46	B47	C	E2	W	MAX ROPE
HB10052400X	2000	312	139	139	85	101	41	69	32	158	32	5
HB20072400X	5000	358	192	184	90	142	56	96	35	172	38	8
HB30092400X	8000	411	242	211	100	161	59	121	40	190	45	11
HB40112400X	12500	483	298	252	120	193	68	149	45	214	53	13
HB50142400X	20000	564	370	305	140	241	76	185	54	239	60	16
HB70182400X	32000	720	476	347	165	270	96	238	66	317	75	18
HB80222400X	50000	828	476	434	210	348	119	238	83	380	95	22

* All dimensions in mm and subject to change without notice.

JDN MONOCRANE

FOUR FALL HEAVY DUTY

HOOK BLOCK

JDN MONOCRANE four fall hook block range features a pivoting trunnion and slewing hook to DIN/ISO Standards, as well as **JDN MONOCRANE** "S" series sheaves with shielded ball bearings to provide optimum performance and wear characteristics. All hooks are fitted with a spring loaded safety catch as standard

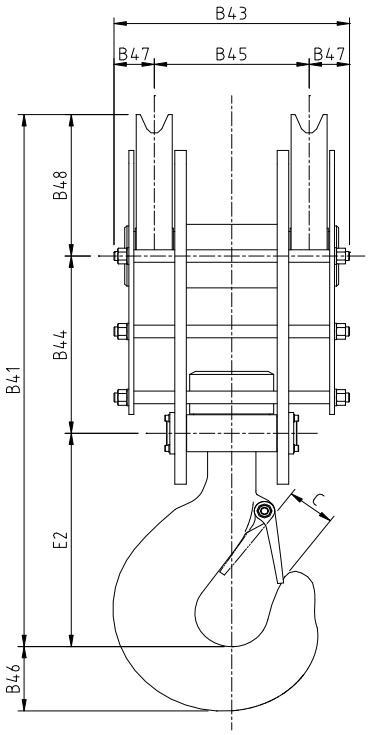

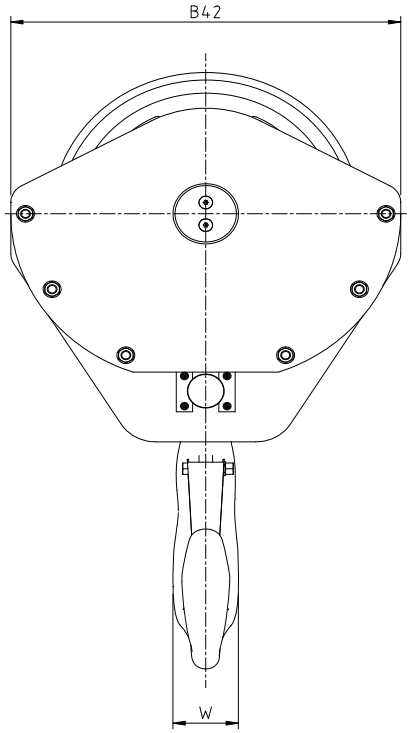

PART No	MRC kg	B41	B42	B43	B44	B45	B46	B47	B48	C	E2	W	MAX ROPE
HB90262400X	63000	959	710	530	235	353	133	89	275	94	449	106	26
HB100302400X	80000	1226	880	541	400	349	151	96	325	93	501	118	30
HB110362400X	100000	1411	952	575	470	378	171	98.5	375	126	566	132	36

* All dimensions in mm and subject to change without notice.

JDN MONOCRANE

EIGHT FALL HOOK BLOCK

JDN MONOCRANE eight fall hook block range features a pivoting trunnion and slewing hook to DIN/ISO Standards, as well as **JDN MONOCRANE** "S" series sheaves with shielded ball bearings to provide optimum performance and wear characteristics. All hooks are fitted with a spring loaded safety catch as standard.

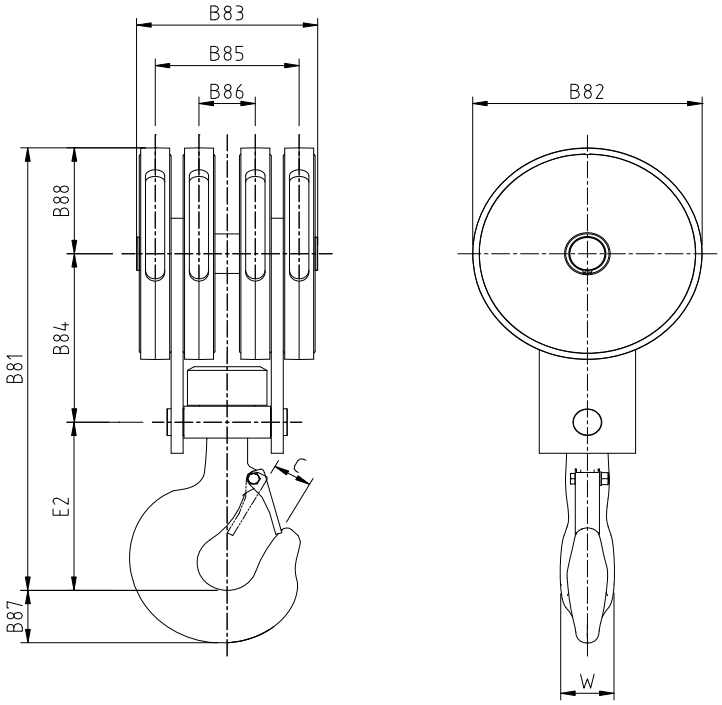

PART No	MRC kg	B81	B82	B83	B84	B85	B86	B87	B88	C	E2	W	MAX ROPE
HB40092800X	12500	545	242	257	210	212	92	68	121	45	214	53	9
HB50112800X	16000	643	298	303	255	245	91	76	149	52	239	60	13
HB60142800X	20000	714	370	318	290	253	87	76	185	52	239	60	14
HB70162800X	32000	793	370	357	290	292	126	96	185	66	318	75	16
HB80182800X	50000	998	476	376	380	299	117	119	238	85	380	95	18

* All dimensions in mm and subject to change without notice.

JDN MONOCRANE

EIGHT FALL HEAVY DUTY HOOK BLOCK

JDN MONOCRANE eight fall hook block range features a pivoting trunnion and slewing hook to DIN/ISO Standards, as well as **JDN MONOCRANE** "S" series sheaves with shielded ball bearings to provide optimum performance and wear characteristics. All hooks are fitted with a spring loaded safety catch as standard.

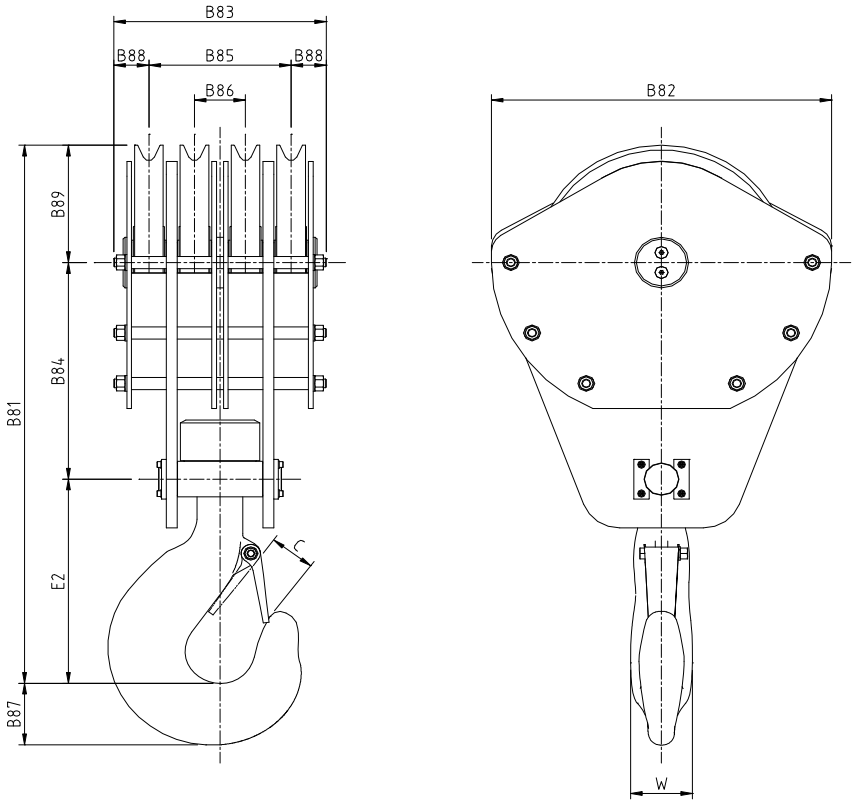

PART No	MRC kg	B81	B82	B83	B84	B85	B86	B87	B88	B89	C	E2	W	MAX ROPE
HB90222800X	63000	1117	606	485	450	320	120	133	82.5	218	94	449	106	22
HB100262800X	80000	1286	700	510	510	341	125	151	84.5	275	93	501	118	26
HB110302800X	100000	1491	880	550	600	368	132	171	91	325	126	566	132	30

* All dimensions in mm and subject to change without notice.

JDN MONOCRANE

SAFETY CATCHES

JDN MONOCRANE safetey catches are made from high strength material and spring loaded to ensure possitive actuation. whilst specifically designed to suit **JDN MONOCRANE** hooks they may be adapted to suit a wide range of hooks on the market.

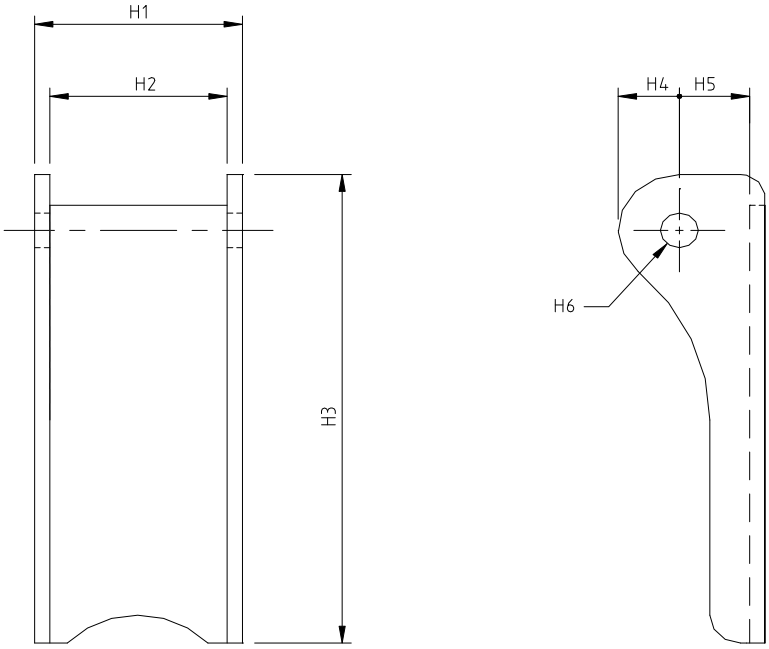

PART NO.	H1	H2	H3	H4	H5	H6
HB10052408X	32	27	84	10	9.5	6
HB20072408X	34	29	84	10	11.5	6
HB30092408X	34	29	84	10	11.5	6
HB40112408X	45	40	96	10	11.5	6
HB50142408X	45	40	96	10	11.5	6
HB70182408X	50	45	132	15.5	13	7.5
HB80222408X	50	45	150	17	22.5	17
HB80222427X	45	40	120	10	11.5	6
HB90262408X	67	61	185	25	20	16
HB100302408X	67	61	220	25	20	16
HB110362408X	67	61	220	25	20	21

* All dimensions in mm and subject to change without notice.

HOIST SERIES	1/1	2/1	4/1	4/2
1000	HB10052408X	HB10052408X	HB10052408X	HB10052408X
2000	HB10052408X	HB10052408X	HB20072408X	HB10052408X
3000	HB10052408X	HB20072408X	HB30092408X	HB20072408X
4000	HB20072408X	HB20072408X	HB40112408X	HB30092408X
5000	HB20072408X	HB30092408X	HB50142408X	HB40112408X
6000	HB20072408X	HB30092408X	HB50142408X	HB50142408X
7000	HB30092408X	HB40112408X	HB70182408X	HB50142408X
8000	HB40112408X	HB80222427X	HB80222408X	HB70182408X
9000	HB50142408X	HB70182408X	HB90262408X	HB80222408X
10000	HB50142408X	HB80222408X	HB100302408X	HB90262408X
11000	HB70182408X	HB80222408X	HB110362408X	HB100302408X

ROPE GUIDES, SPRINGS & STOPS

ROPE GUIDES

PART NO.	HOIST SERIES	ROPE SIZE	NETT WEIGHT
RD10042440 RD10042440R RD10052440	AH10	4 4 5	1.2
RD20052440 RD20052440R RD20072440	AH20	5 5 7	1.9
RD30072440 RD30072440R RD30092440	AH30	7 7 9	2.9
RD40092440 RD40092440R RD40112440	AH40	9 9 11	4.7
RD50112440 RD50112440R RD50142440	AH50	11 11 14	7.8
RD60142440 RD60142440R RD60162440	AH60	14 14 16	11.7
RD70162440 RD70162440R RD70182440	AH70	16 16 18	18.9
RD80182440 RD80182440R RD80222440	AH80	18 18 22	22

TENSION SPRINGS

PART NO.
RD10052443
RD20072443
RD30092443
RD40112443
RD50142443
RD60162443
RD70182443
RD80222443

ROPE GUIDE STOP

PART NO.
RD10052442
RD20072442
RD30092442
RD40112442
RD50142442
RD60162442
RD70182442

All prices exclude GST

NOTE: These Rope Guides suit **JDN MONOCRANE** hoists exclusively.

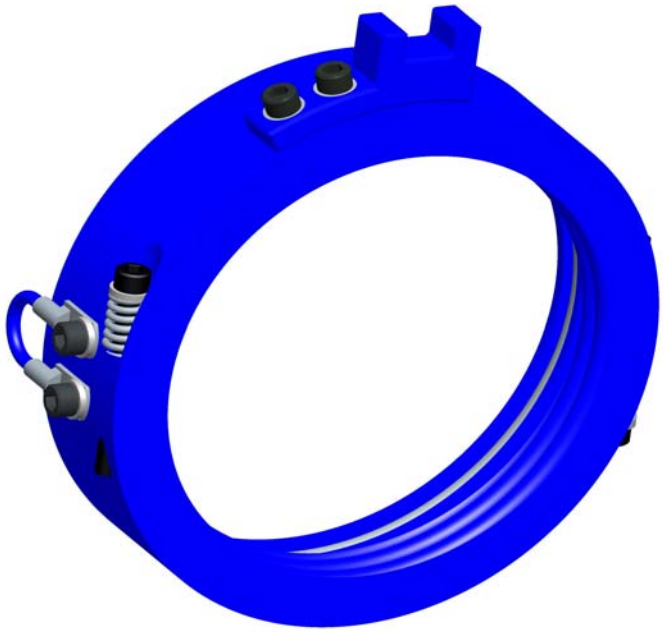

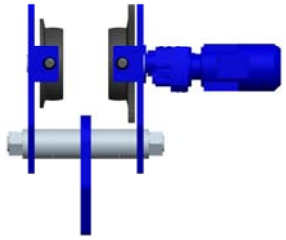

JDN MONOCRANE

TROLLEYS

JDN MONOCRANE trolleys are available in motorised or push / pull variants and feature an adjustable width cross bolt system and our SW series wheels.

JDN MONOCRANE SW Series wheels are manufactured in Ductile Iron, Grade 500-7(GGG-50), providing a balance between strength, ductility and wear resistance. Featuring shielded ball bearings, machine cut teeth and a spherical tread profile which is compatible with both parallel and tapered beam flanges.

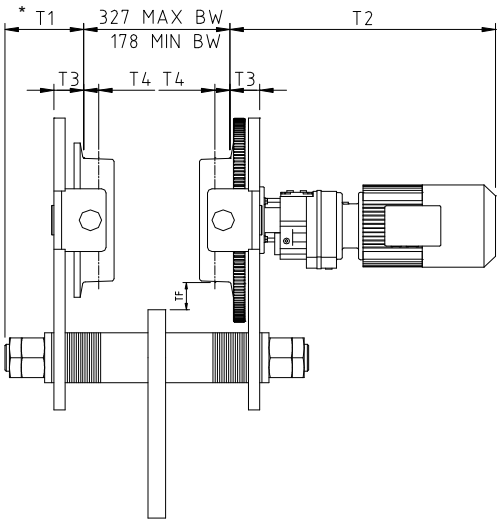

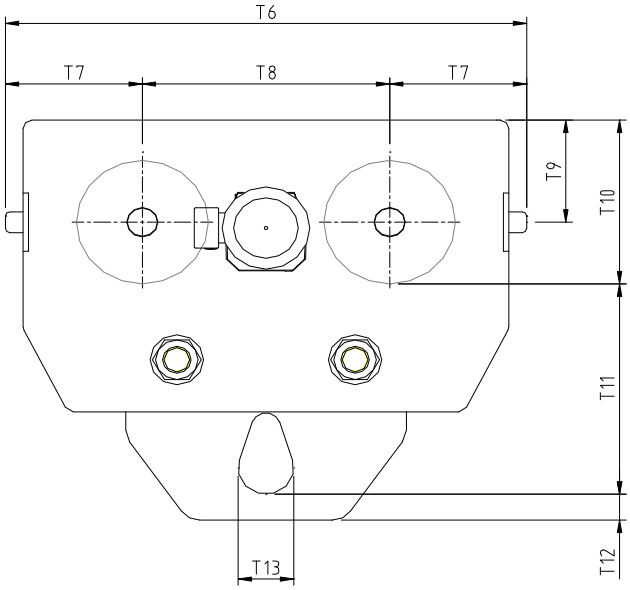

BW = BEAM WIDTH

* NOTE : TOTAL CROSS BOLT LENGTH DOES **NOT** CHANGE WITH BEAM WIDTH.

AS THE BEAM WIDTH DECREASES, T1 INCREASES.

MOTORISED TROLLEYS

PART NO.	T1	T2	T3	T4	T6	T7	T8	T9	T10	T11	T12	T13	TF
TROL_MO_080_20F	106	493	41	13	505	120.5	264	112.5	160	295	35	70	40
TROL_MO_125_20F	125	526	50	16	600	144	312	152.5	200	305	35	70	50
TROL_MO_160_20F	136	578.5	61	20	765	187.5	390	180	265	395	50	100	45
TROL_MO_200_20F	154	581.5	64	28	930	228	474	245	330	432.5	62.5	125	55
TROL_MO_250_20F	177	596	67	28	1090	267.5	555	310	395	502.5	62.5	125	65

PUSH TROLLEYS

PART NO.	T1	T2	T3	T4	T6	T7	T8	T9	T10	T11	T12	T13	TF
TROL_PU_080_P	106	106	41	13	505	120.5	264	112.5	160	295	35	70	40
TROL_PU_125_P	125	125	50	16	600	144	312	152.5	200	305	35	70	50
TROL_PU_160_P	136	136	61	20	765	187.5	390	180	265	395	50	100	45
TROL_PU_200_P	154	154	64	28	930	228	474	245	330	432.5	62.5	125	55
TROL_PU_250_P	177	177	67	28	1090	267.5	555	310	395	502.5	62.5	125	65

* All dimensions in mm and subject to change without notice.

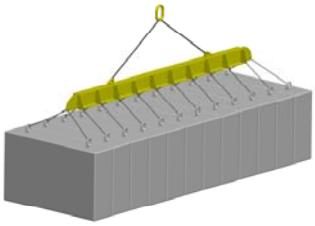

JDN MONOCRANE

TEST WEIGHT HIRE

SYSTEM 1

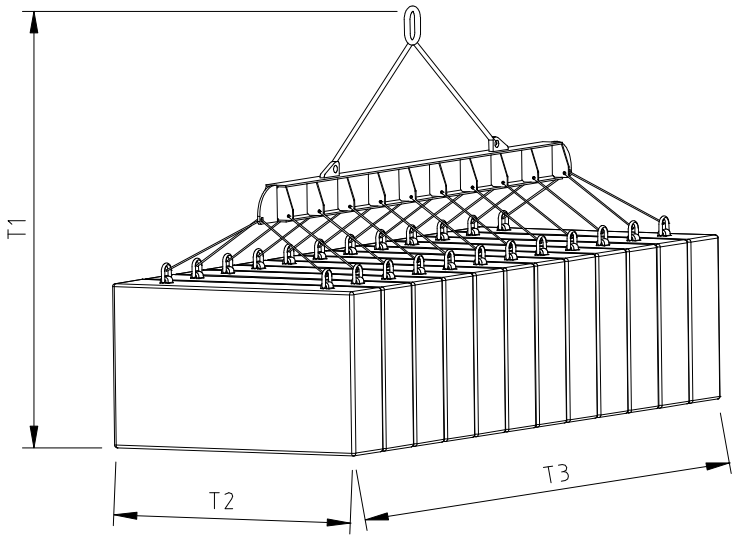

SYSTEM 2

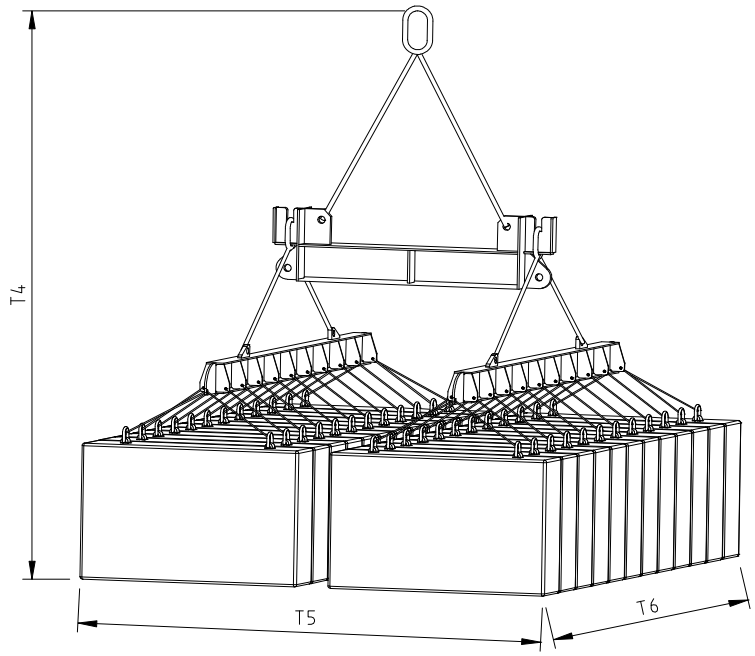

PART NO.	T1	T2	T3	T4	T5	T6
SYSTEM 1 2.5 to 24t	2900	1800	4910	-	-	-
SYSTEM 2 24 to 48.5t	-	-	-	4750	3900	4910

* All dimensions in mm and subject to change without notice.

JDN MONOCRANE

COMPONENT STORE

FACTORY

MAIN CRANE ASSEMBLY & HEAVY FABRICATION

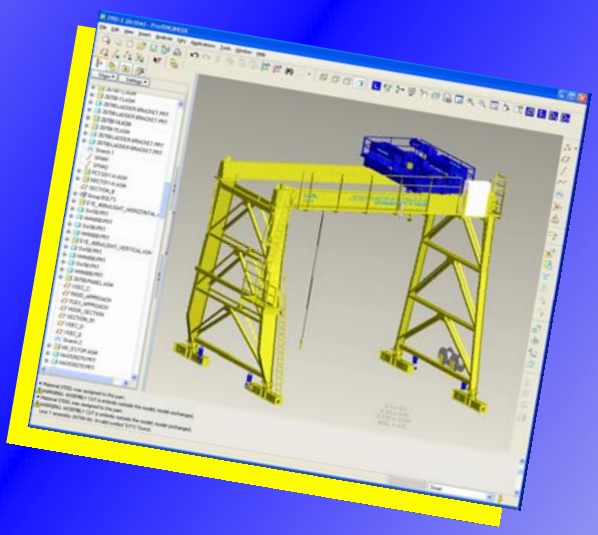

3D DESIGN

MACHINE SHOP

JDN MONOCRANE

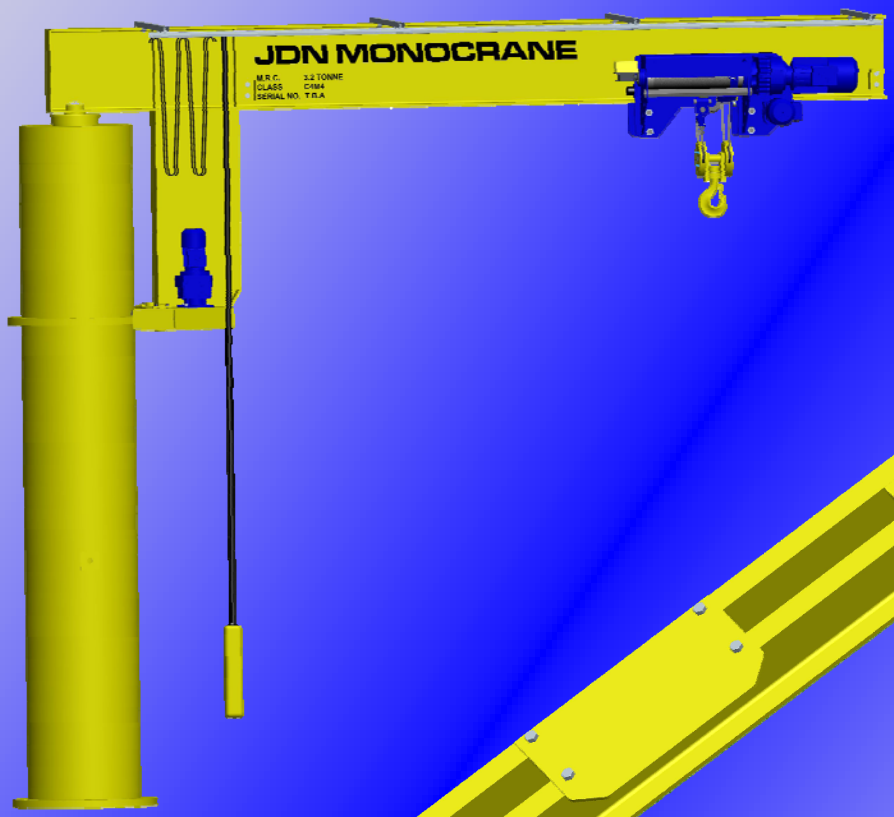
JDN MONOCRANE
M.R.C. 3.2 TONNE
CLASS C4M4
SERIAL NO. T.B.A

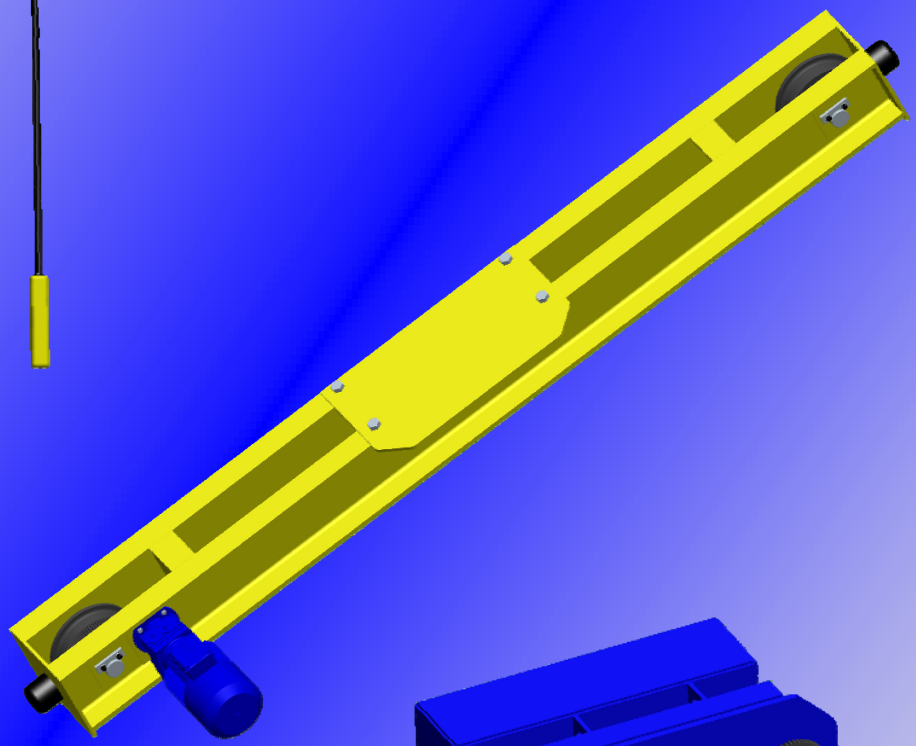

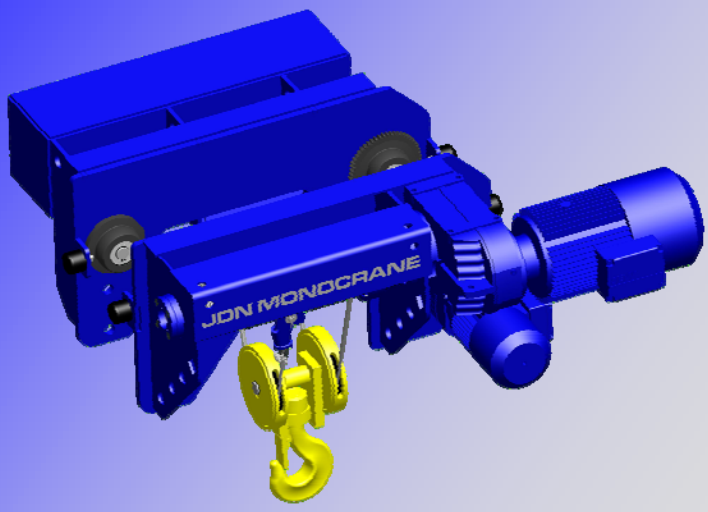
JDN MONOCRANE

Victoria

Head Office

7-11 Nathan Road

DANDENONG VIC 3175

Tel: +61 3 9797 6666

Fax: +61 3 9793 3022

Email: sales_vic@jdn.com.au

Queensland

14 Freight Street

YATALA QLD 4207

Tel: +61 7 3807 7852

Fax: +61 7 3807 3460

Email: sales_qld@jdn.com.au

South Australia

Unit 3, 59 Kapara Road

GILLMAN SA 5013

Tel: +61 8 8447 2266

Fax: +61 8 8447 2277

Email: sales_sa@jdn.com.au

New South Wales

Tel: +61 2 9773 7714

Fax: +61 2 9773 7914

Web: www.jdn.com.au

New Zealand

16 Tavern Road
SILVERDALE AUCKLAND 2001
Tel: +64 9 426 7636
Fax:+64 9 426 9888

Web: www.monocrane.co.nz
Email: admin@monocrane.co.nz